Description

- Single-pin circular connector for mobile power distribution, electro motors and generators
- Resistant to mechanical influences in harsh environmental conditions
- Connectors in harmonised colours according to European standards
- Every colour has a different coding to prevent incorrect plugging

General Characteristics

Series	A6 C
Version	panel-mount box, source for contact with M12 threaded post
Rated voltage (V)	1000 V
Rated impulse voltage	8 kV
Rated current (A)	max. crimp 660 A
Contacts	Crimp termination: copper, silver-plated
Number of contacts	1
Termination methods	Crimp termination: 35 - 240 mm²
Protection	IP 67 (maximum, dependant on cable gland used) IP 20 (unmated)
Cycle of mechanical operation	500
Temperature range	-25°C to +125°C
Degree of soiling	3

Product Variatioons

Article- Number	Article	Fastening type	Pin configuration
Type POWERLOCK A6, panel-mount box, source for contact with M12 threaded post			
44420226	POWERLOCK A6 PE/GN	Ø5,5mm (4x)	PE, Green
44420227	POWERLOCK A6 N/BL	Ø5,5mm (4x)	N, Blue
44420228	POWERLOCK A6 L1/BN	Ø5,5mm (4x)	L1, Brown
44420229	POWERLOCK A6 L2/BK	Ø5,5mm (4x)	L2, Black
44420230	POWERLOCK A6 L3/GY	Ø5,5mm (4x)	L3, Grey
L1/red for direct current applications in conjunction with L2/black			
44420317	POWERLOCK A6 L1/RD	Ø5,5mm (4x)	L1, Red

Materials and Surfaces

Housing	PBT
Contact retention pin	PA

Approvals

VDE-Approval, VDE-REG.-No.	D042

Technical Drawings

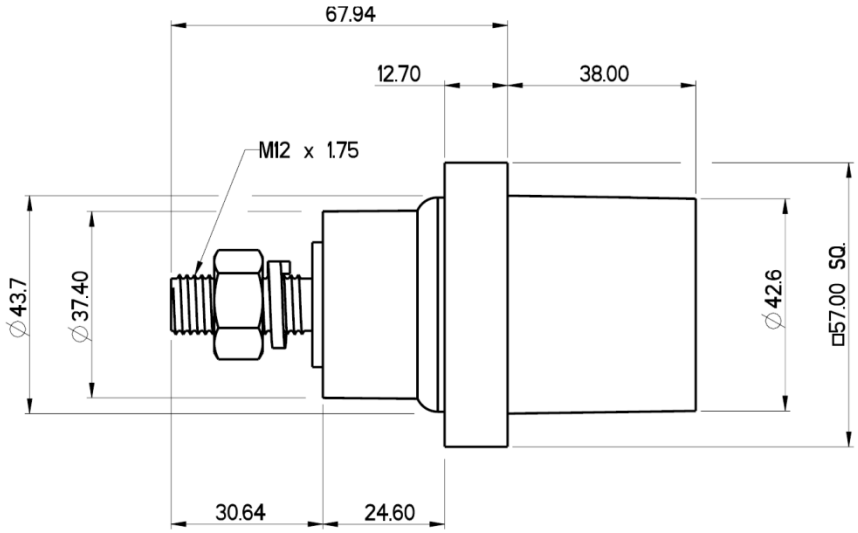

Panel cutout

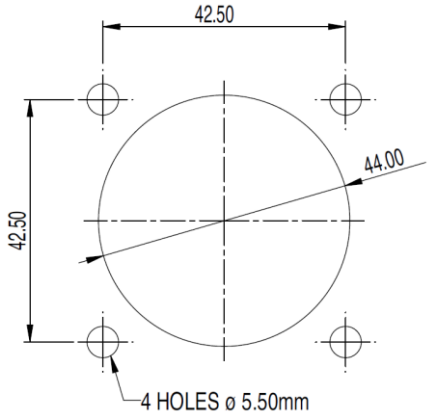

System description

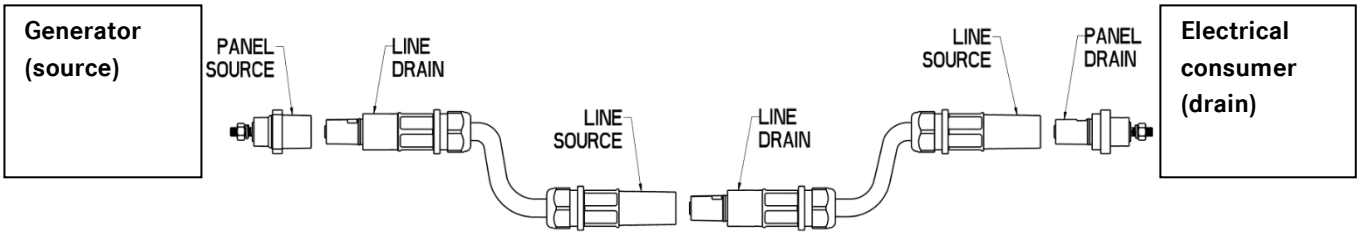

	Line connector	Panel mount connector	Crimp contact	Screw contact
Source	D6 	A6 		
Drain	F6 	A1 		

Step 1) Selection of housings:
Step 2) Selection of SKINTOP® cable gland M40 for the housing (only cable connectors):
e.g. 3111250 (black), 53111450 (light grey), 53111050 (silver grey)
Step 3) Decision: 400 A / max. 120mm² -> Screw contacts
660 A / max. 240mm² -> Crimp contacts
! Screw and crimp contacts are not allowed to be mixed!
Step 4) Selection of contacts:
Crimp contacts

	35 mm²	50 mm²	70 mm²	95 mm²	120 mm²	150 mm²	185 mm²	240 mm² (NEW)
Quelle (Source)	44420290	44420291	44420292	44420236	44420238	44420257	44420239	44420324
Senke (Drain)	44420293	44420294	44420295	44420231	44420233	44420256	44420234	44420339

Attention:

The effective copper cross-sections of cables are significantly smaller than the electrical values given.
We always recommend qualifying the cable-contact combination.
(From 120 mm² strong effects on the quality of the connection.
Example: 240 mm² cables fit better in 185 mm² contacts.)

Contacts with M12 thread (for cable lug Ø12 mm)

	M12-thread 660 A	M12-thread 400 A
Source	 44420261	 44420242
Drain	 44420260	 44420241

Tightening torque M12 nut: 27,5 Nm - 31,4 Nm

REG.-Nr. D042

Robust

Reliability

Waterproof

Info

Connector for unscreened single-core power cables

Application range

For renewable energy plants e.g. wind power
For mobile and stationary power distribution
For the connection of motors, transformers and generators
Light & sound technology

Product features

Panel-mount base, straight entry
Contact fixing by contact retention pin, each pin can only be used once
Housing without contact, order contact separately

Remark

Photographs are not to scale and do not represent detailed images of the respective products.